kontron

» Whitepaper «

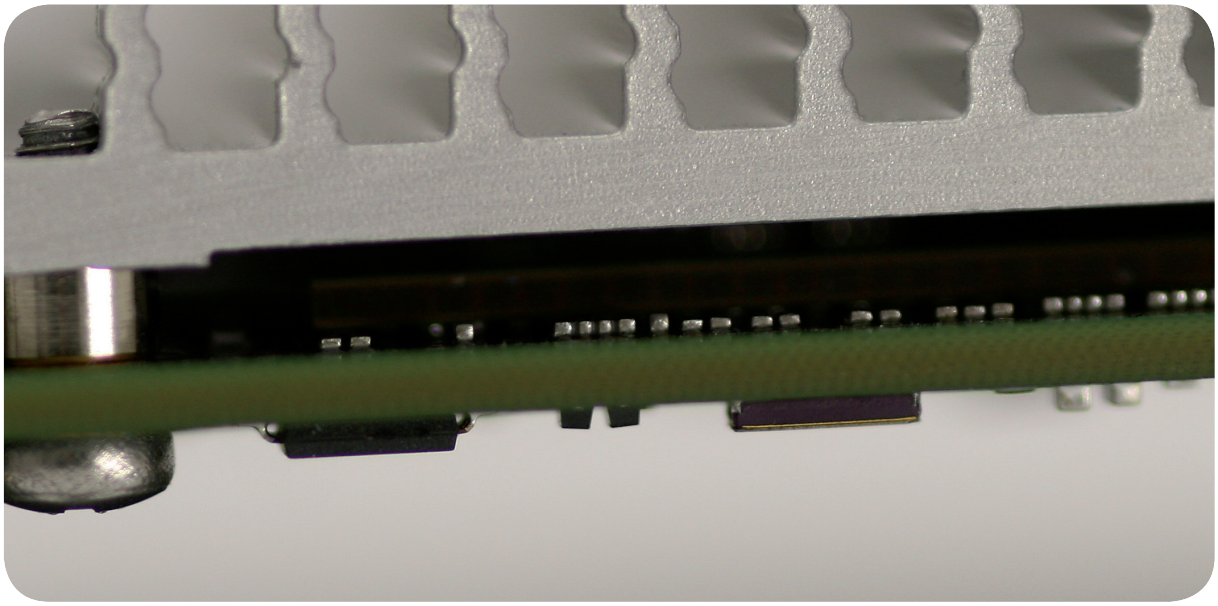

Freescale™ QorIQ Designs in Practice

High-speed Serial Interfaces based on AdvancedMC™ and MicroTCA

If it's embedded, it 's Kontron.

Freescale™ QorIQ Designs in Practice

High-speed Serial Interfaces based on AdvancedMC™ and MicroTCA

With the QorIQ processing platforms, Freescale™ introduces a new generation of highly efficient and high performing processors. This paper summarizes the main features of the new generation and shows how they can be used for designs based on off-the-shelf components. In order to benefit from high-speed serial interfaces, designs are based on AdvancedMC™ (AMC) and MicroTCA™. The paper concludes with an entry-level evaluation platform and tools for system configuration and low-latency inter-processor communication.

Claudia Bestler, Jürgen Mayr, Guido Moser

CONTENTS

QorIQ Processing Platforms

The QorIQ processing platforms represent the evolution of the PowerQUICC line of processors from Freescale™. They are available in a variety of single-core and multi-core CPUs. The P1 and P2 platforms are based on the e500V2 Power Architecture® core, the P3 and P4 platforms are based on the e500mc 32-bit Power Architecture® core. The P5 platform introduces embedded 64-bit processing with the e5500 core scaling up to 2.2 GHz. All processors fulfill the characteristic requirements in embedded computing: long term availability and a high efficiency in terms of power dissipation per computing cycle. Also, all processors support IEEE1588 time stamps, which make them an excellent choice for real-time processing with high accuracy.

The QorIQ platforms can be summarized in the following way:

- P1 Platform - Up to 800 MHz, <5W Max: processors are available as single-cores and dual cores with a choice of options for hardware acceleration for communications (in terms of protocols and data path processing) and power saving functions.
- P2 Platform - Up to 1.2 GHz, <8W Max: The characteristic processor in this class is the P2020 dual-core communications processor, which is also available in a pin-compatible single-core version. On the higher end, the P2040/P2041 processors represent quad-core versions with data path acceleration.
- P3 Platform - Up to 1.5 GHz, <15W Max: The P3041 processor represents a quad-core version with higher capacity for packet throughput (fabric support for IP forwarding).
- P4 Platform - Up to 1.5 GHz, <30W Max: The P4080 represents an eight-core communication processor with fabric support for packet processing. It is also available in a pin-compatible version, the P4040 quad-core communications processor.
- P5 Platform - Up to 2.2 GHz, <30W Max: The P5020 is a server class 64bit dual-core processor. It is based on the e5500 core architecture and intended for complex arithmetic operations and high-performance control place processing (rather than data plane packet processing). For this reason, the e5500 core supports a larger backside L2 cache for complex operations. The floating point unit of each e5500 core supports single-precision (32 bit) floating-point processing at twice the speed of e500 cores, and double-precision (64 bit) floating-point processing at 4 times the speed of e500 cores.

So how do e500V2, e500mc and e5500 based processors align with preceding architectures? For high-performance applications, Figure 1 shows the most characteristic members of the QoIQ processor platforms in comparison to the highly successful line of e600 cores. The MPC8641D processor represents a dual-core version of the e600 core including a floating-point unit and fast L2 caches (at 1 MB per core) for speeds up to 1.5 GHz. In terms of computing power and versatility, the MPC8641D, as implemented on the Kontron AdvancedMC™ processor module AM4100, still represents an unprecedented success story.

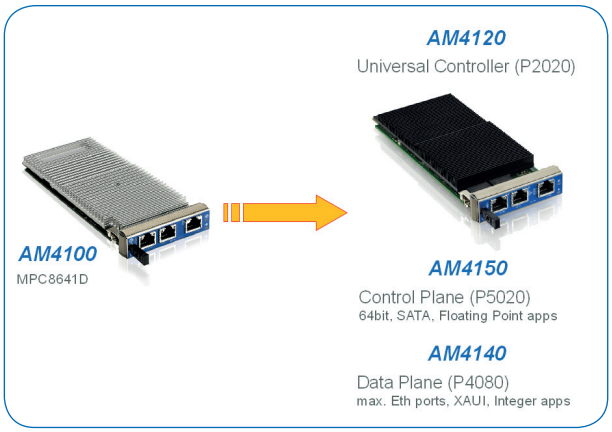

Figure 1 QorIQ Designs

When migrating to e500V2, e500mc and e5500 types of core architecture, there is no single successor to this line of products. Power efficiency (in terms of power dissipation per computing cycle) is improving considerably with the higher level of integration on silicon (moving to smaller structures). However the choice of processor depends on the type of application. The most universal design is represented by the P2020 processor, which is now available on the Kontron AMC processor module AM4120.
The Kontron AM4120 provides an entry point into QorIQ design. The P2020 processor is ideally suited as a universal dual-core controller with a low power envelope. Preferred usage models are for example as a control processor for vehicles, in avionics and for communications. The Kontron AMC processor module AM4120 is now available including evaluation systems and tools for system configuration and inter-processor communication.For more demanding applications, designs may be ported to either
(1) packet processing types of applications based on the P4080 processor (such as the upcoming Kontron AMC processor module AM4140), respectively to
(2) control plane types of applications with high demands on floating-point processing based on the P5020 processor (which will be featured on the upcoming Kontron AMC processor module AM4150).

Areas of Application

Among the many areas of applications are vehicle control, avionics, test systems for avionics, motion control, surface inspection, communication and test systems for communications. From a hardware point of view, all applications need low-latency processing. Some of the applications need multi-processor systems for either data plane type of processing or control plane type of processing. As a representative example, Figure 2 shows a multi-processor system. Such a system could be used for an application in communications (such as an LTE base

station), respectively a test system for base stations (for protocol conformance or load tests). At the hardware level, the design is quite universal and also applies for other areas of application. From a technical point of view, the common requirement is high-throughput processing with low latency.

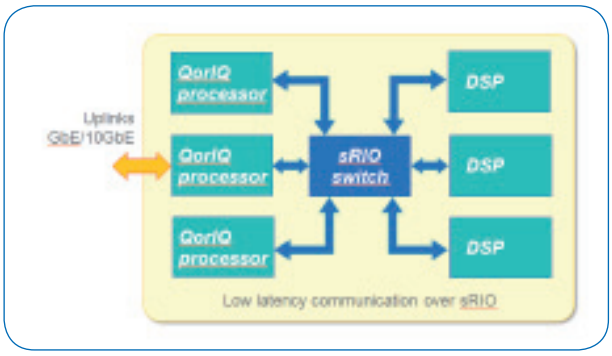

Figure 2 Applications and Test System for LTE

System Design

When moving to a deeper level in system design, the following topics need to be addressed:

- How to handle QorIQ designs implemented on AMC?
- How to set up an evaluation system?
- Which tools are available for configuration management at system level?
- Which tools are available to handle inter-processor communication over sRIO?

For AMCs, there are conventions for the backplane fabrics represented at the AMC connector, which allows combining AMCs from different suppliers. A sample design of a QorIQ AMC is shown in Figure 3. The basic connectivity between AMCs is provided over GbE on AMCs ports 0 and 1. In a system, those ports connect to an Ethernet switch on the MCH, which also provides exterior uplinks to the system over GbE or 10GbE.

Data exchange over Serial RapidIO is using AMC ports 4-7, i.e. 4 lanes with a total capacity of 10Gbps. AMC ports 4-7 also connect to the sRIO fabric switch contained in the MCH over the backplane, respectively they connect to other AMCs over point-to-point connections. Alternatively, the same AMC ports can be configured for PCI-Express (in combination with a PCIe switch on the MCH, respectively point-to-point connections to another AMC).
Such a design typically represents a P2020 type of QorIQ processor, as implemented on the Kontron AdvancedMC™ processor module AM4120. For more performing types of processors, such as the P4080 for data plane processing, or the P5020 for control plane processing, extra fabrics are provided on the AMC connector: extra 10GbE or extra sRIO over AMC ports 8-11, respectively PCIe. The use of fabrics on AMC ports can be configured on the AMCs. Still, the basic system design remains coherent with the P2020, so the Kontron AMC processor module AM4120 represents an excellent starting point for QorIQ designs.
On a system level, a range of MicroTCA™ systems are available. At the entry level, the Kontron MicroTCA™ platforms OM6040 and OM6060 apply. The Kontron OM6040 supports switched fabrics with a Kontron MCH AM4904-SRIO (respectively a Kontron MCH AM4904-PCIE). The Kontron MicroTCA™ platform OM6060 uses simple point-to-point fabric connectivity for sRIO (or PCIe) fabrics between adjacent AMCs. Thus, the Kontron MicroTCA™ platform OM6060 can be combined with a low cost MCH without fabric switch, such as the Kontron AM4901. Figure 4 shows the Kontron OM6060 entry-level evaluation system.

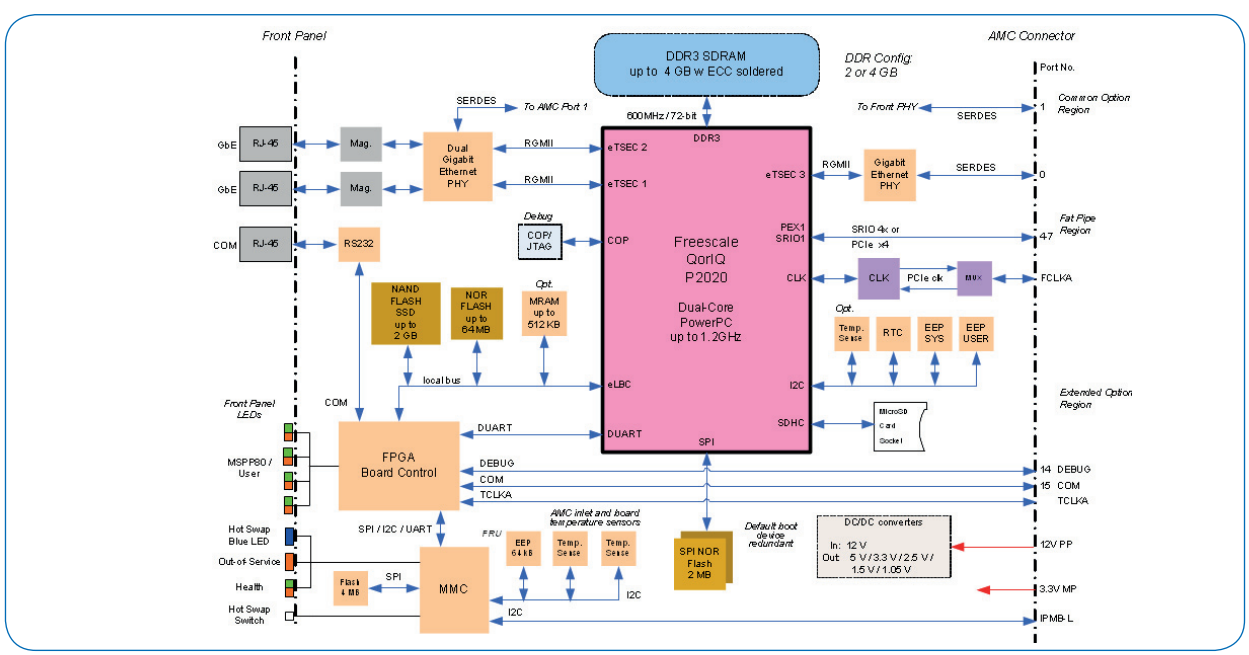

Figure 3 Design in Practice: QorIQ on AMC

Data exchange over Serial RapidIO is using AMC ports 4-7, i.e. 4 lanes with a total capacity of 10Gbps. AMC ports 4-7 also connect to the sRIO fabric switch contained in the MCH over the backplane, respectively they connect to other AMCs over point-to-point connections. Alternatively, the same AMC ports can be configured for PCI-Express (in combination with a PCIe switch on the MCH, respectively point-to-point connections to another AMC).
Such a design typically represents a P2020 type of QorIQ processor, as implemented on the Kontron AdvancedMC™ processor module AM4120. For more performing types of processors, such as the P4080 for data plane processing, or the P5020 for control plane processing, extra fabrics are provided on the AMC connector: extra 10GbE or extra sRIO over AMC ports 8-11, respectively PCIe. The use of fabrics on AMC ports can be configured on the AMCs. Still, the basic system design remains coherent with the P2020, so the Kontron AMC processor module AM4120 represents an excellent starting point for QorIQ designs.

On a system level, a range of MicroTCA™ systems are available. At the entry level, the Kontron MicroTCA™ platforms OM6040 and OM6060 apply. The Kontron OM6040 supports switched fabrics with a Kontron MCH AM4904-SRIO (respectively a Kontron MCH AM4904-PCIE). The Kontron MicroTCA™ platform OM6060 uses simple point-to-point fabric connectivity for sRIO (or PCIe) fabrics between adjacent AMCs. Thus, the Kontron MicroTCA™ platform OM6060 can be combined with a low cost MCH without fabric switch, such as the Kontron AM4901. Figure 4 shows the Kontron OM6060 entry-level evaluation system.
The Kontron MicroTCA™ platform OM6060 accommodates one MCH (such as the Kontron AM4901), and up to 6 mid-size AMCs. Between adjacent AMCs, the AMC ports 4-7 connect to each other via point-to-point links. In combination with the Kontron AMC processor module AM4120, those links may be used for direct sRIO connectivity (respectively for PCIe to a peripheral card). The Kontron MCH AM4901 provides a GbE switch, which connects to each AMC over AMC ports 0, as well as port 1 on AMC slots 1 and 6.
The configuration of AMC slot 1 is prepared to accommodate an extra packet processor, such as the Kontron AdvancedMC™ processor modules AM4210, AM4204 or AM4220. Those AMCs provide 4x GbE on AMC ports 8-11, so when placed into AMC slot 1, they may directly connect to 4 adjacent AMCs (in slots 2 to 5) over GbE. Between AMC slots 5 and 6, there is another direct point-to-point link at AMC ports 8-11, which may be used as fabric link for extra sRIO or 10GbE, if provided by the respective AMCs. Thus, the Kontron MicroTCA™ platform OM6060 represents a versatile and cost effective entry level system for QorIQ designs.

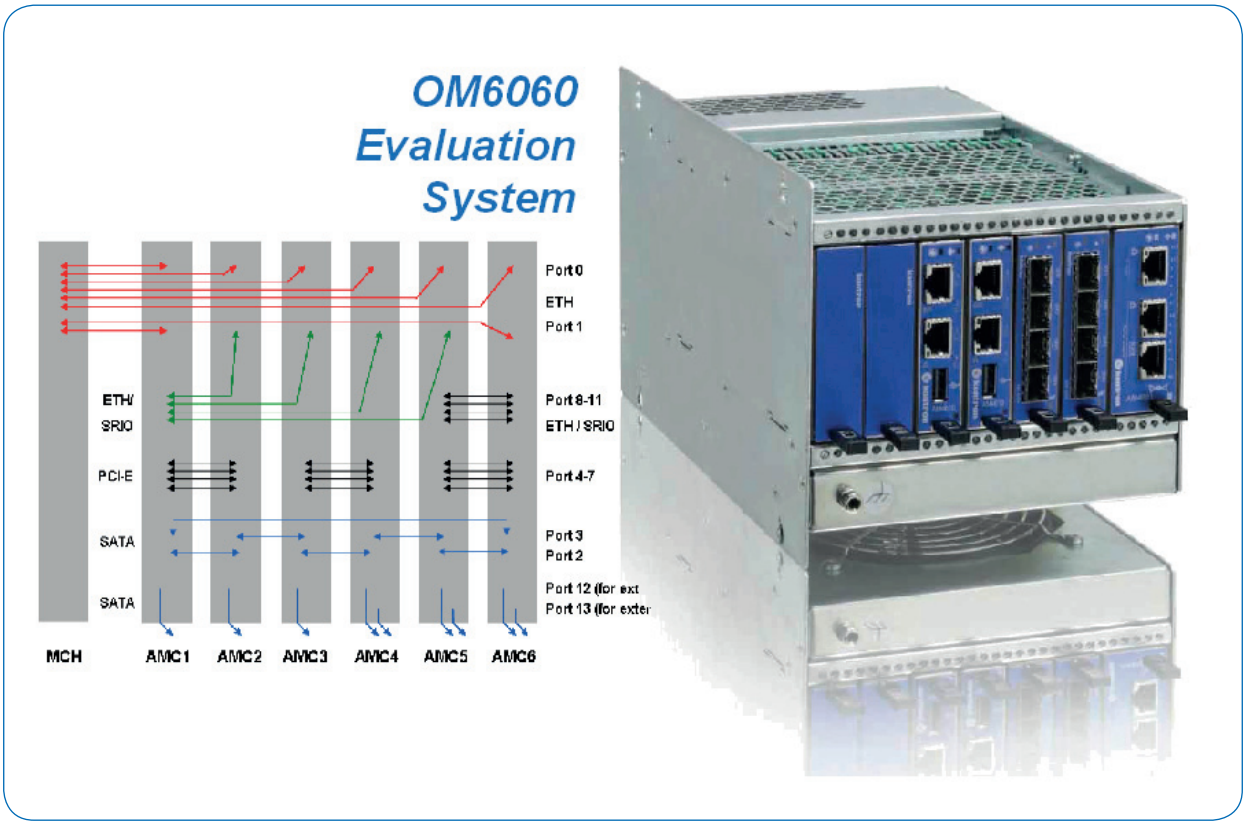

Figure 4 Evaluation System

Development Tool

While there is a choice of tools for application development depending on the type of application, there is also a need for development tools at system level for configuration. MicroTCA™ systems are managed over IPMI. The MCH is in charge of this type of management: it checks electronic keying before booting-up the system; it controls the power, hot-swap cycles and fans. Also, IPMI allows monitoring the system, i.e. to check system event logs, monitor the health of the system and to take measures in case of problems. However, handling IPMI messages and commands over a command line interface (CLI) requires a deeper level of knowledge and experience by the user.
In order to facilitate system configuration over IPMI, Kontron provides with its OMVIU a graphical user interface, which can be installed as a Java application on any type of remote PC or server. The MicroTCA™ configuration management supports an icon based visualization of the system and its states, monitoring and tracing of events, error logging facilities, and corrective actions by visualization and mouse clicks. Figure 5 shows a sample screen of the configuration management tool.
The intuitive GUI supports all standard compliant systems (backplanes, fan units, power modules), MCHs and AMCs.

Boards and systems may be configured without deep knowledge of IPMI, sensors and other MicroTCA™ specific detail. The OMVIU is easy to learn and helps to create remote controlled MicroTCA™ systems. Vendor specific recognition and graphical representation of boards and components is normalized for easy addition of new icon layouts as bitmaps. With its trace and error logging facilities it is possible to find non-specification conform behavior of components. During development, lab evaluation, and deployment, the remote system may be supervised with user notification on changes.
For entry level designs, Kontron provides all the components including AMCs, MCHs, off-the-shelf systems and tools. Kontron also provides systems for higher performance in MicroTCA™ and ATCA® and a choice of processors and network technology. All components are compliant to AdvancedMC™ and MicroTCA™ standards, so there is a migration path from evaluation systems and entry level systems to high-end systems and for future processing platforms.

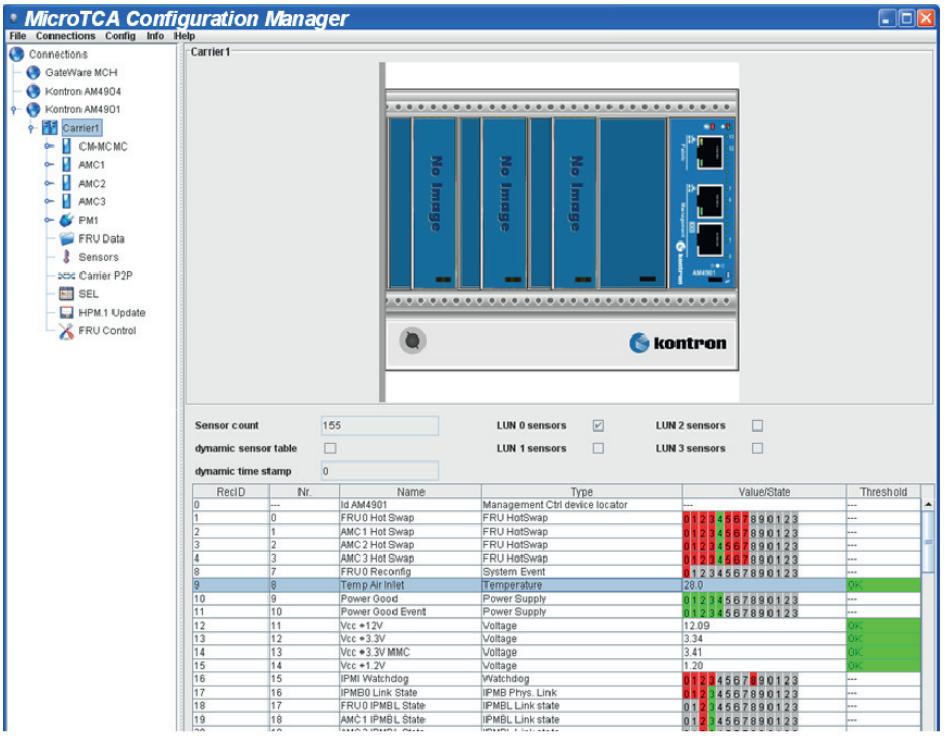

Figure 5 Graphical Configuration Management Tool for MicroTCA

About Kontron

Kontron is a global leader in embedded computing technology. With more than 30% of its employees in Research and Development, Kontron creates many of the standards that drive the world's embedded computing platforms. Kontron's product longevity, local engineering and support, and value-added services, helps create a sustainable and viable embedded solution for OEMs and system integrators. Kontron works closely with its customers on their embedded application-ready platforms and custom solutions, enabling them to focus on their core competencies. The result is an accelerated time-to-market, reduced total-cost-of-ownership and an improved overall application with leading-edge, highly-reliable embedded technology.

Kontron is listed on the German TecDAX stock exchange under the symbol "KBC". For more information, please visit: **www.kontron.com**

CORPORATE OFFICES

Europe, Middle East & Africa

Norbert Hauser
Kontron
Tel: +49 (8341) 803-0
norbert.hauser@kontron.com

Michael Hennen
SAMS Network
Tel: +49 (2405) 45267-20
michael.hennen@samsnetwork.com

America

Richard Pugnier
Kontron
Tel:+1 (858) 623-3006
richard.pugnier@us.kontron.com

Annette Keller
Keller Communications
Tel:+1 (949) 640-4811
annettekeller@sbcglobal.net

APAC

Richard Pugnier
Kontron
Tel:+1 (858) 623-3006
richard.pugnier@us.kontron.com

Michael Hennen
SAMS Network
Tel: +49 (2405) 45267-20
michael.hennen@samsnetwork.com